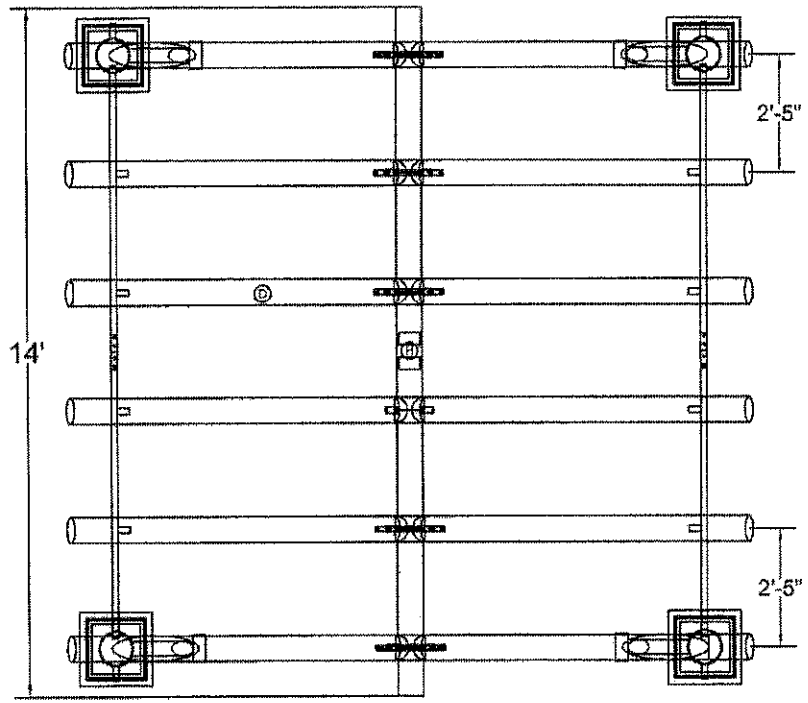
14'
2'-5"
2'-5"

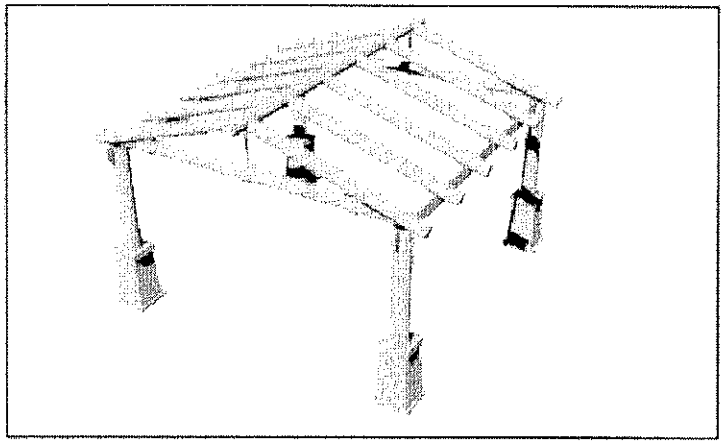

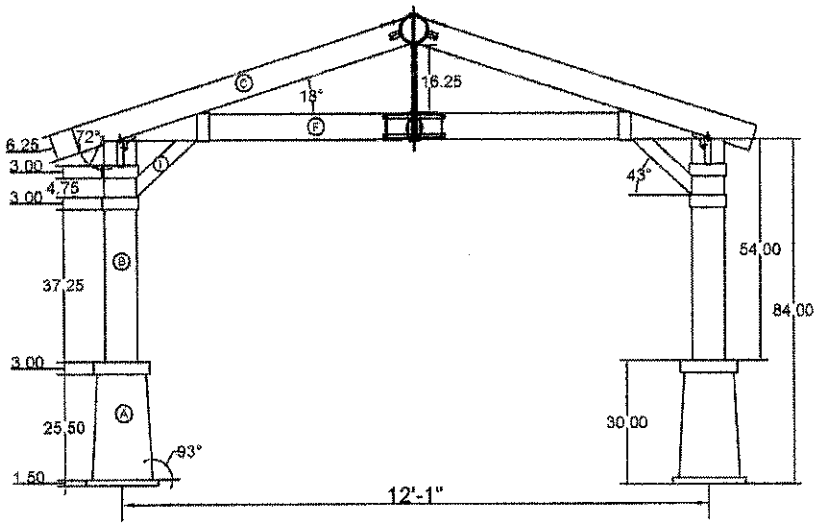
16.25
18°
72°
6.25
3.00
4.75
3.00
43°
54.00
84.00
37.25
3.00
25.50
30.00
93°
1.50
12'-1"

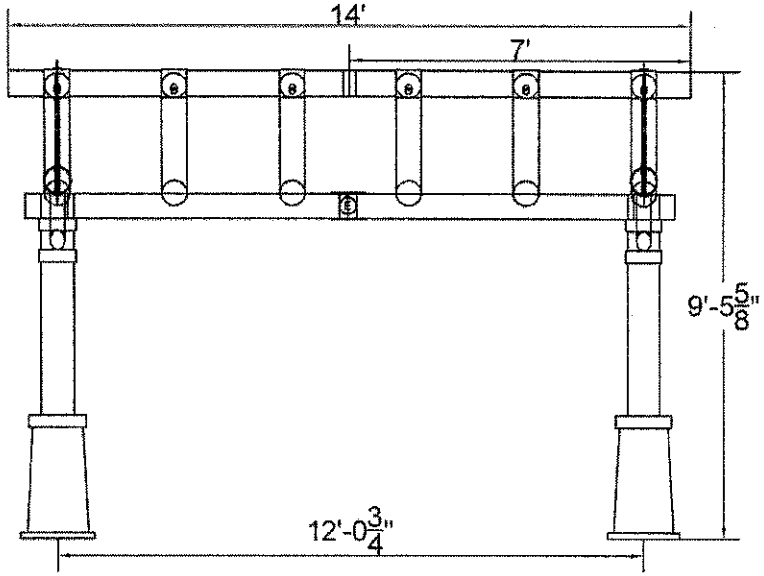
14'
7'
9'-5 5/8"
12'-0 3/4"